Electrolux PROFESSIONAL

Modular Cooking Range Line 700XP Freestanding Electric Pasta Cooker, 2 Wells 24.5 litres

ITEM #

MODEL #

NAME #

SIS #

AIA #

371099 (E7PCEH2KF0) Freestanding electric pasta cooker, 24.5lt well, 2 wells - 400V

Short Form Specification

Item No.

Infrared heating system positioned below the well. Constant starch removal during the cooking process. Pressed tank in 316-L AISI stainless steel to protect against corrosion. Manual water tap. Height adjustable feet in stainless steel. Exterior panels in stainless steel with Scotch Brite finish. One piece pressed work top in 1.5 mm thick stainless steel. Right-angled side edges to allow flush-fitting junction between units.

APPROVAL:

Main Features

- In addition to cooking pasta, the appliance can be used for noodles of every kind, rice, dumplings and vegetables.
- Unit to have infrared heating system positioned beneath the base of the wells.
- Water basins are seamlessly welded into the top of the appliance.
- Provided with integrated drip zone on which baskets can be placed for draining purposes.
- 24.5 liters water basins.
- Unit to feature skimming zone for starch removal: improved water quality over time.
- Easy-to-use control panel.
- Safety thermostat to avoid operation without water.
- Continuous water filling regulated through a manual water tap.
- Large drain with manual ball-valve for fast emptying of well.
- Automatic lifting system (optional accessory): 200mm wide unit with two stainless steel basket supports, holding one GN 1/2 basket each, to be placed on either or both sides of machine to provide automatic lifting for four small portion baskets (to be ordered separately). Possibility to memorize nine cooking times through digital control.
- All major compartments located in front of unit for ease of maintenance.
- Unit delivered with four 50 mm legs in stainless steel as standard (all round Stainless steel kick plates as option).

Construction

- All exterior panels in Stainless Steel with Scotch Brite finishing.
- One piece pressed 1.5 mm work top in Stainless steel.
- Model has right-angled side edges to allow flush fitting joints between units, eliminating gaps and possible dirt traps.
- Water basin in 316-L Stainless steel.
- IPx4 water protection.

Sustainability

- ESD available as accessory (installed separately): energy saving device uses heat produced by water drained through the overflow to pre-heat tap-in water up to 60°C, for constant water boiling.

Included Accessories

- 2 of Door for open base cupboard PNC 206350

Optional Accessories

- Junction sealing kit PNC 206086 ❑
- Kit 4 wheels - 2 swivelling with brake - it is mandatory to install Base support and wheels PNC 206135 ❑
- Flanged feet kit PNC 206136 ❑
- Frontal kicking strip for concrete installation, 800mm PNC 206148 ❑
- Frontal kicking strip for concrete installation, 1000mm PNC 206150 ❑
- Frontal kicking strip for concrete installation, 1200mm PNC 206151 ❑
- Frontal kicking strip for concrete installation, 1600mm PNC 206152 ❑
- Frontal kicking strip, 800mm (not for refr-freezer base) PNC 206176 ❑
- Frontal kicking strip, 1000mm (not for refr-freezer base) PNC 206177 ❑
- Frontal kicking strip, 1200mm (not for refr-freezer base) PNC 206178 ❑
- Frontal kicking strip, 1600mm (not for refr-freezer base) PNC 206179 ❑
- Kit 4 feet for concrete installation (not for 900 line free standing grill) PNC 206210 ❑
- Pair of side kicking strips PNC 206249 ❑
- Pair of side kicking strips for concrete installation PNC 206265 ❑
- Chimney upstand, 800mm PNC 206304 ❑
- Right and left side handrails PNC 206307 ❑
- Back handrail 800 mm PNC 206308 ❑
- Energy saving device for pasta cookers PNC 206344 ❑
- Door for open base cupboard PNC 206350 ❑
- Automatic programmable Basket Lifting System for 24,5lt Pasta Cookers, 2 lifters PNC 206352 ❑
- Base support for feet or wheels - 800mm (700/900) PNC 206367 ❑
- Base support for feet or wheels - 1200mm (700/900) PNC 206368 ❑
- Base support for feet or wheels - 1600mm (700/900) PNC 206369 ❑
- Base support for feet or wheels - 2000mm (700/900) PNC 206370 ❑
- Rear paneling - 800mm (700/900) PNC 206374 ❑
- Rear paneling - 1000mm (700/900) PNC 206375 ❑
- Rear paneling - 1200mm (700/900) PNC 206376 ❑
- Support frame for 2 pasta cooker basket (700XP) PNC 206396 ❑
- Chimney grid net, 400mm (700XP/900) PNC 206400 ❑
- 2 side covering panels for free standing appliances PNC 216000 ❑
- Frontal handrail, 800mm PNC 216047 ❑
- Frontal handrail, 1200mm PNC 216049 ❑
- Frontal handrail, 1600mm PNC 216050 ❑
- Large handrail - portioning shelf, 800mm PNC 216186 ❑
- 2 baskets, left and right (105x160x240) for pasta cookers - 700XP and EMPower PNC 921020 ❑
- 2 baskets, left and right (105x105x240) for pasta cookers - 700XP and EMPower PNC 921021 ❑
- False bottom (230x350x60) for pasta cooker baskets - EVO700 PNC 921022 ❑
- Lid for pasta cookers PNC 921607 ❑
- 2 baskets (220x170x240) for pasta cookers - 700XP and EMPower PNC 921610 ❑
- Full size basket (220x350x240) for pasta cookers - 700XP and EMPower PNC 921611 ❑
- 2 half size baskets 105x350 for pasta cookers for 24,5lt pasta cookers PNC 921619 ❑

The company reserves the right to make modifications to the products without prior notice. All information correct at time of printing.

2024.10.06

Modular Cooking Range Line 700XP Freestanding Electric Pasta Cooker, 2 Wells 24.5 litres

Front

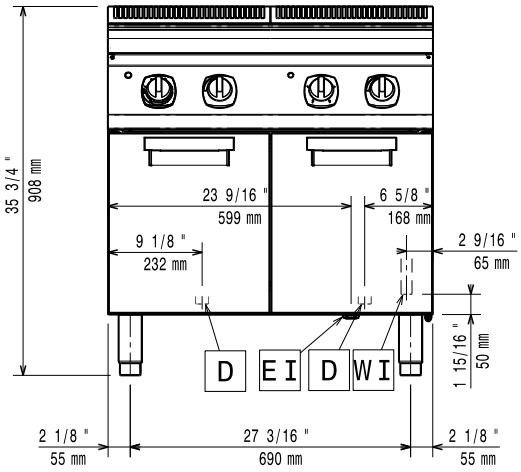

Side

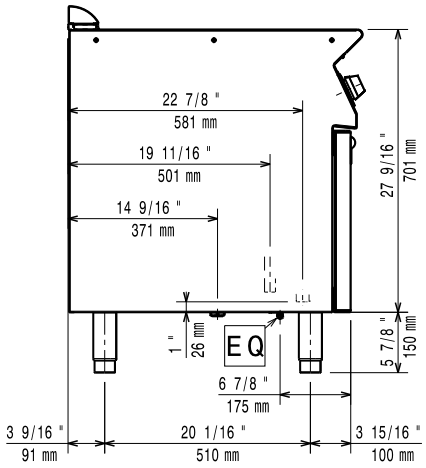

D = Drain
EI = Electrical inlet (power)
EQ = Equipotential screw
WI = Water inlet

Top

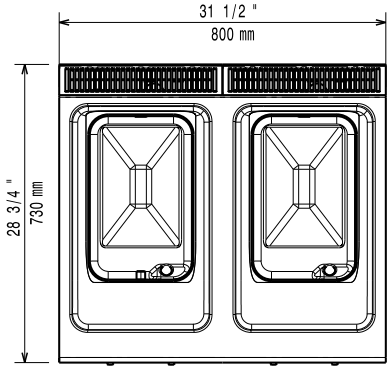

Electric

Supply voltage:	
371099 (E7PCEH2KF0)	380-400 V/3N ph/50/60 Hz
Electrical power max.:	12 kW
Total Watts:	12 kW
Predisposed for:	380-400V 3N~ 50/60Hz 10.8-12kW

Water:

Drain "D":	1"
Incoming Cold/hot Water line size:	1/2"
Total hardness:	5-50 ppm

Electrolux Professional recommends the use of treated water, based on testing of specific water conditions.

Please refer to user manual for detailed water quality information.

Key Information:

Usable well dimensions (width):	250 mm
Usable well dimensions (height):	300 mm
Usable well dimensions (depth):	400 mm
Well Capacity (MAX):	24.5 lt MAX
External dimensions, Width:	800 mm
External dimensions, Depth:	730 mm
External dimensions, Height:	850 mm
Net weight:	65 kg
Shipping weight:	77 kg
Shipping height:	1130 mm
Shipping width:	820 mm
Shipping depth:	860 mm
Shipping volume:	0.8 m³

If appliance is set up or next to or against temperature sensitive furniture or similar, a safety gap of approximately 150 mm should be maintained or some form of heat insulation fitted.

Certification group:	EPC72S

The company reserves the right to make modifications to the products without prior notice. All information correct at time of printing.